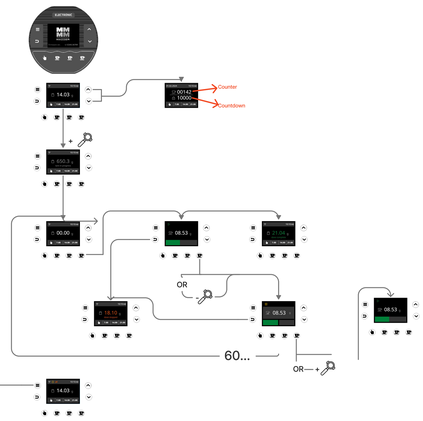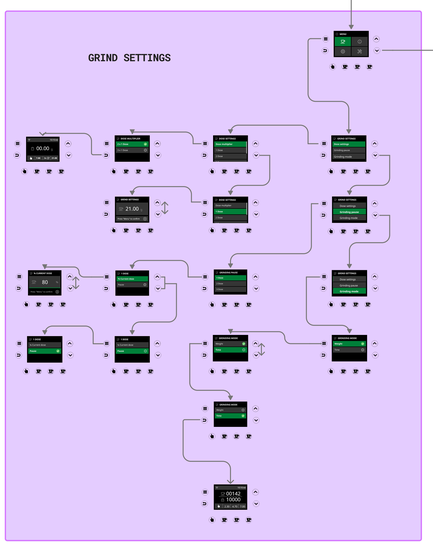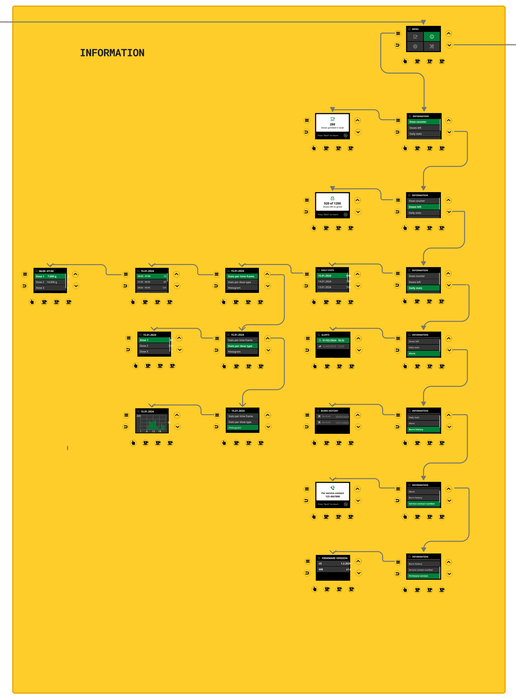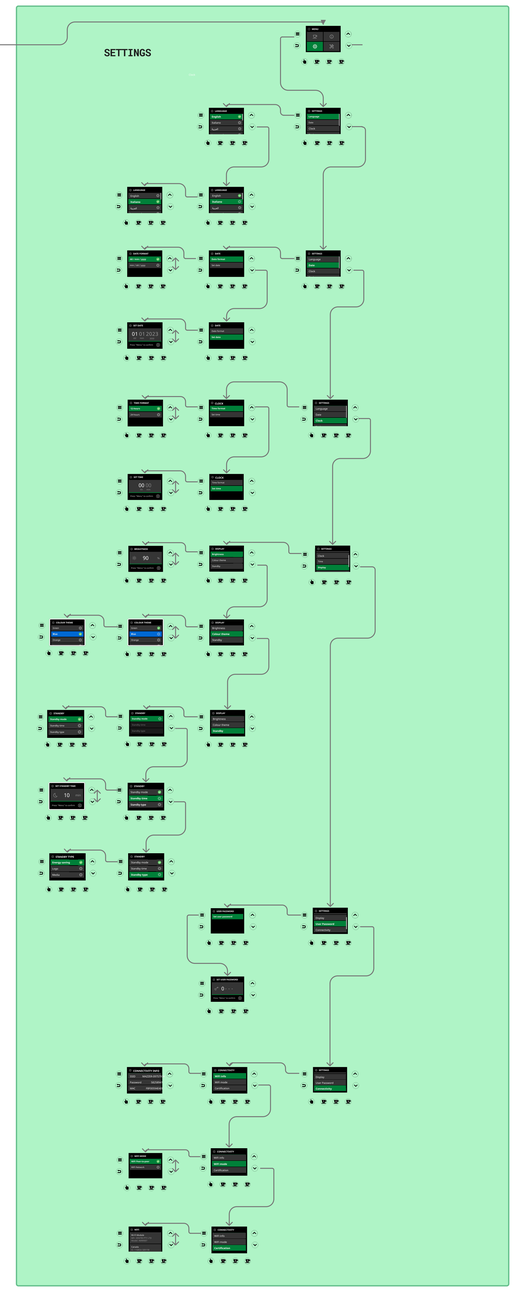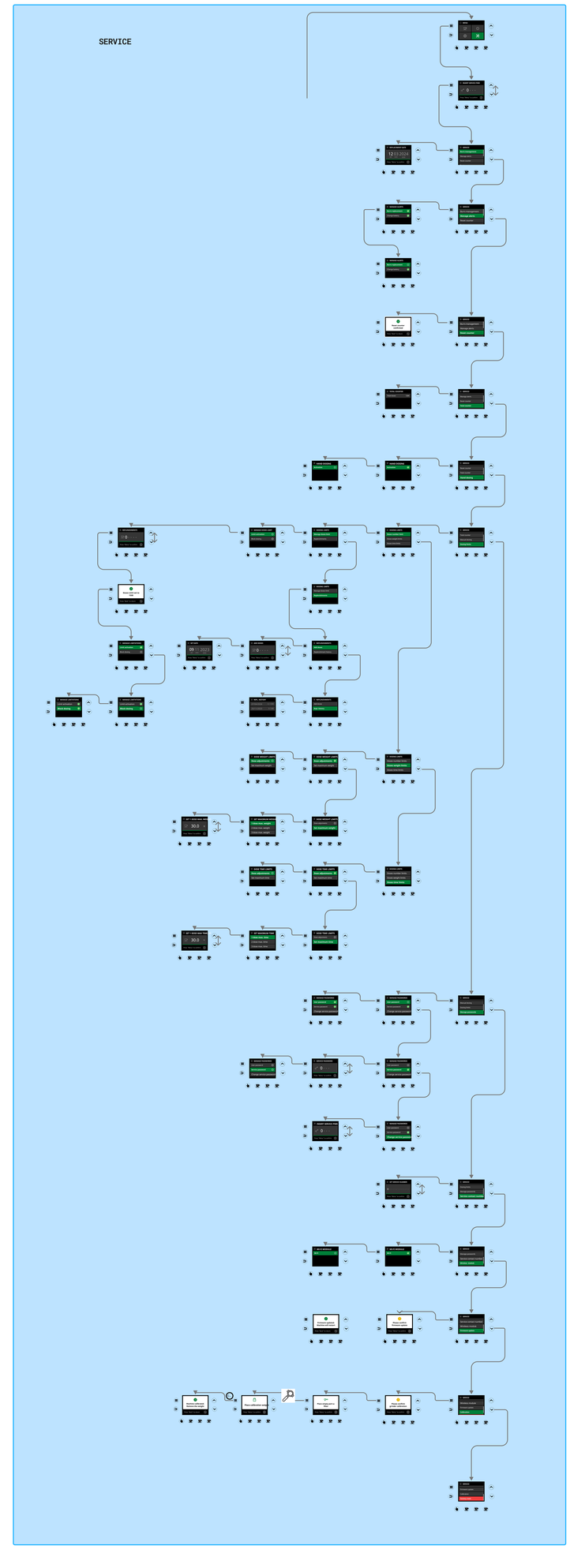WDDE501-060924
ELECTRONIC INTERFACE